ShPS-24 Mod.10, ShPS-24 Mod.11, ShPS-24 Mod.12 Connection Diagram

0V and +V: Connection of load power supply circuits
Outputs XT1...XT6: 0.4 A max. Output XP3: 0.6 A max
Total current for all the outputs: 2.0 A max
A, B: Connection of RS-485 ports of the devices housed in the box
A1, B1: Connection of RS-485 line 1
A2, B2: Connection of RS-485 line 2
Line 1 and line 2 are isolated from A, B line and from each other
R1, R2: End-of-line resistors 620 ohm provided, when the ShPS-24 is the first or the last device in the RS-485 interface bus.

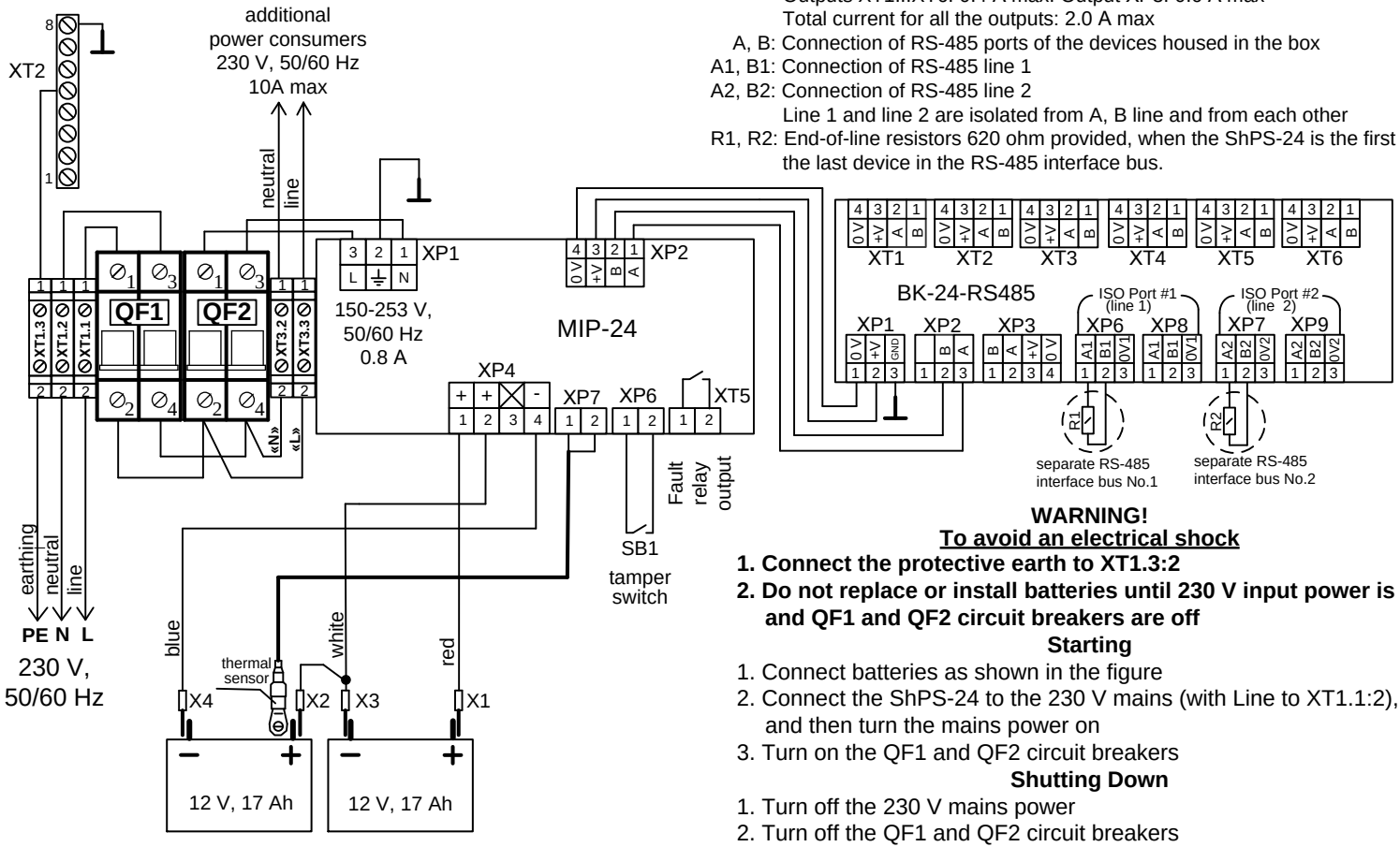

WARNING!

To avoid an electrical shock

1. **Connect the protective earth to XT1.3:2**
2. **Do not replace or install batteries until 230 V input power is off and QF1 and QF2 circuit breakers are off**

Starting

1. Connect batteries as shown in the figure
2. Connect the ShPS-24 to the 230 V mains (with Line to XT1.1:2), and then turn the mains power on
3. Turn on the QF1 and QF2 circuit breakers

Shutting Down

1. Turn off the 230 V mains power
2. Turn off the QF1 and QF2 circuit breakers
3. Disconnect terminals from the batteries

BOLID®
ZAO NVP BOLID Tel./Fax: **+7(495) 775-7155** (multichannel)